REVISION LIST							
ITEM	ECN NO.	POSITION	DESCRIPTION WHO	IS	DATE	APPROVED BY	APPROVED BY

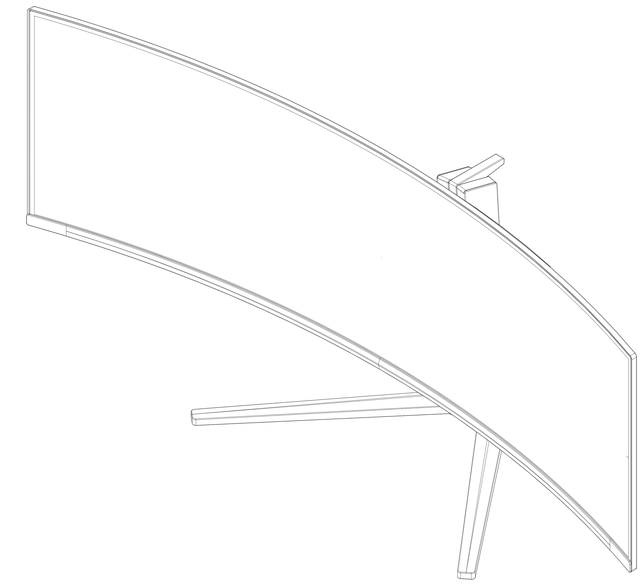

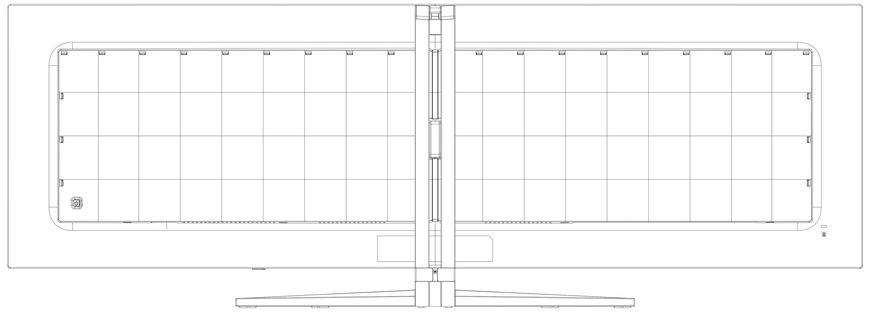

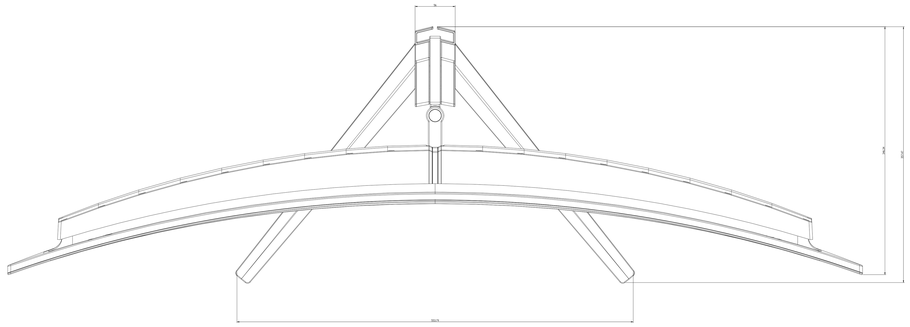

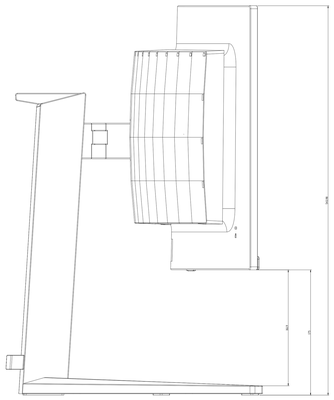

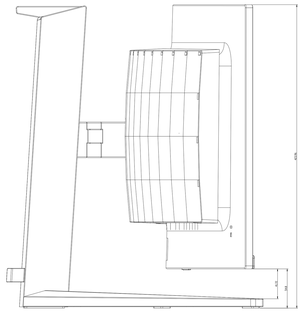

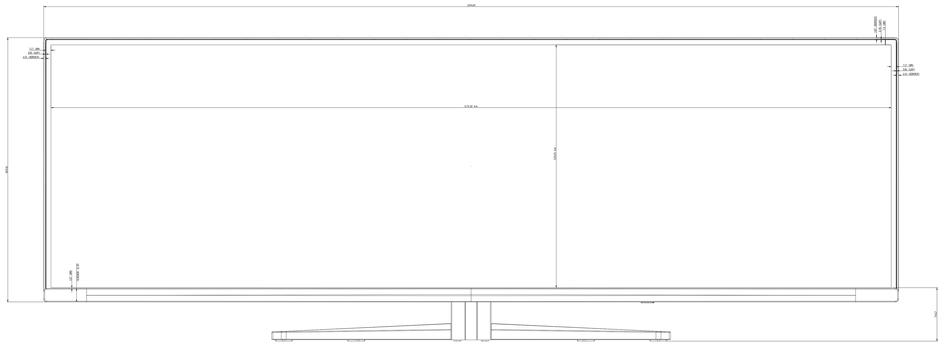

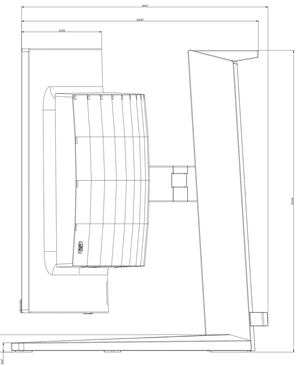

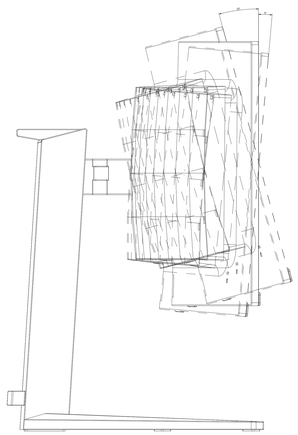

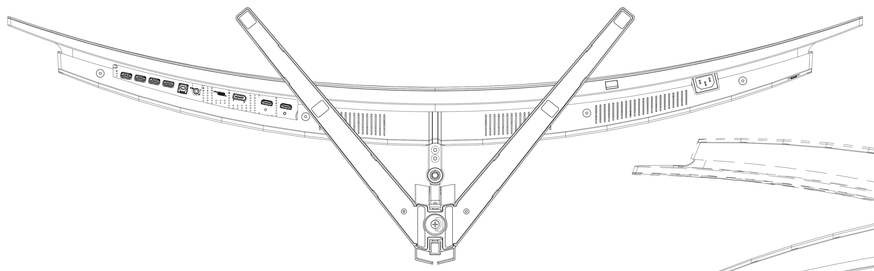

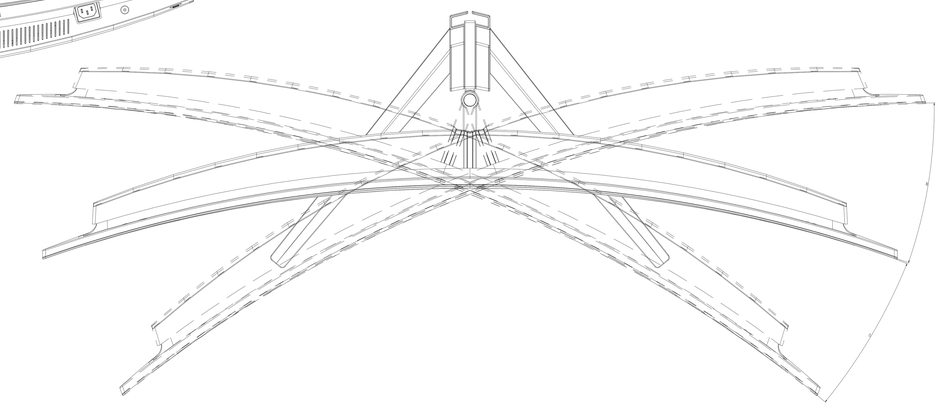

TOLERANCE UNLESS OTHERWISE SPECIFIED (mm)			
RANGE OF DIM.	METAL & PLASTIC	POLYFOAM	CARTON
0~6	±0.20		
6~30	±0.25		
30~120	±0.35	±0~0.5	
120~300	±0.50		
300~500	±0.70		
500~1000	±0.80	±0~1.0	±2~5
1000~2000	±0.90	±0~1.5	
ANGLE (SHEET METAL)	±1/2°		
Internal Diameter of Plastic Screw Boss	±0.05		

REF:

PRE 15 DEN PV PROTOS 12th

PRE 15 PROTOS 20th

UNIT: mm	TOLERANCE UNLESS OTHERWISE SPECIFIED	
SCALE: 1:100	3rd ANGLE PROJECTION	

TOLERANCE: GENERAL

DRAWN: DATE: 02/09/21

CHECK: DATE:

TPV technology

TITLE:

SIZE: A0 REV:

DRAWING NUMBER:

SHEET 1 OF 1